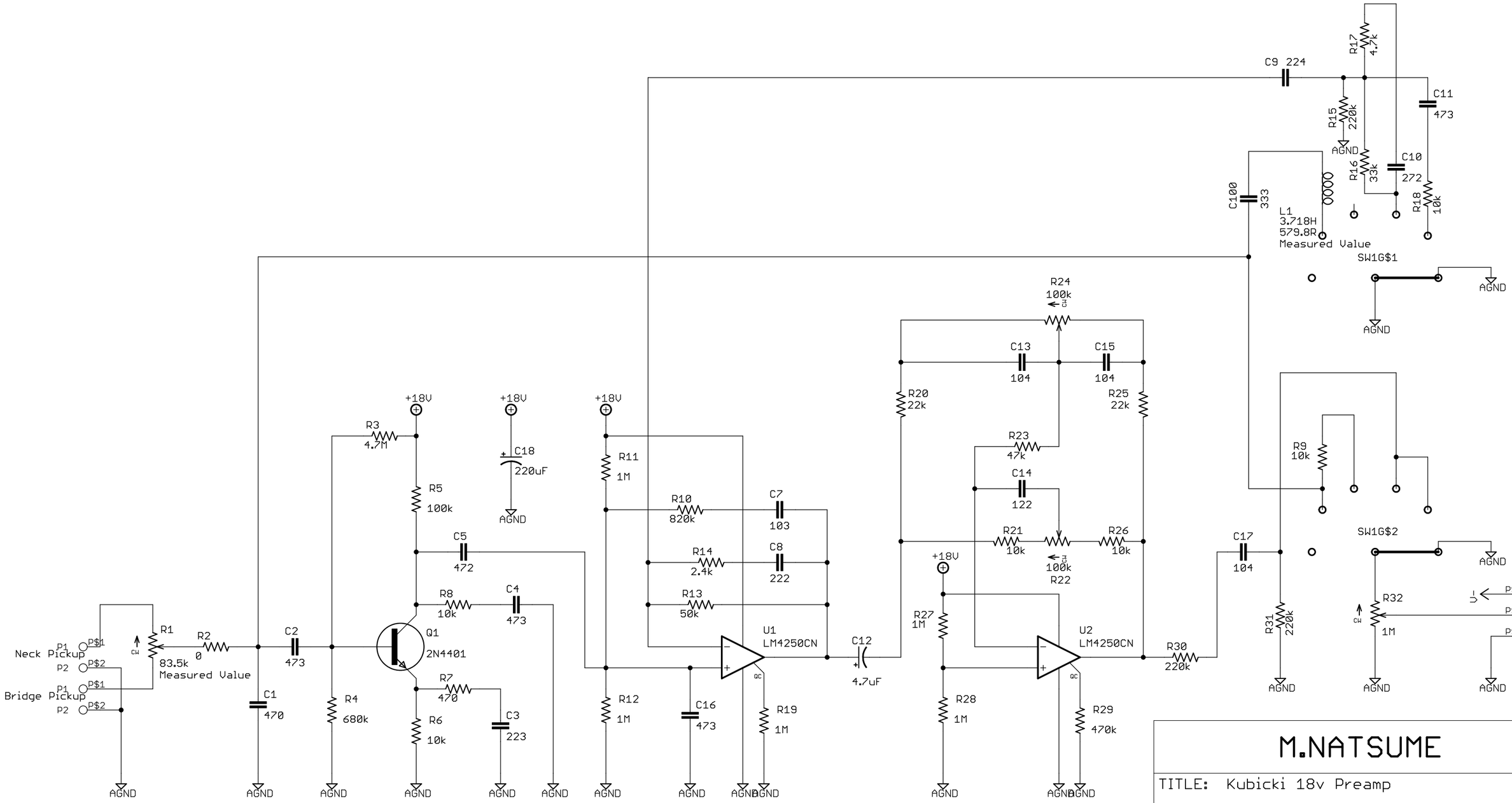

M.NATSUME

TITLE: Kubicki 18v Preamp

Document Number:

REV:

Date: 8/09/2016 10:29 AM

Sheet: 1/1